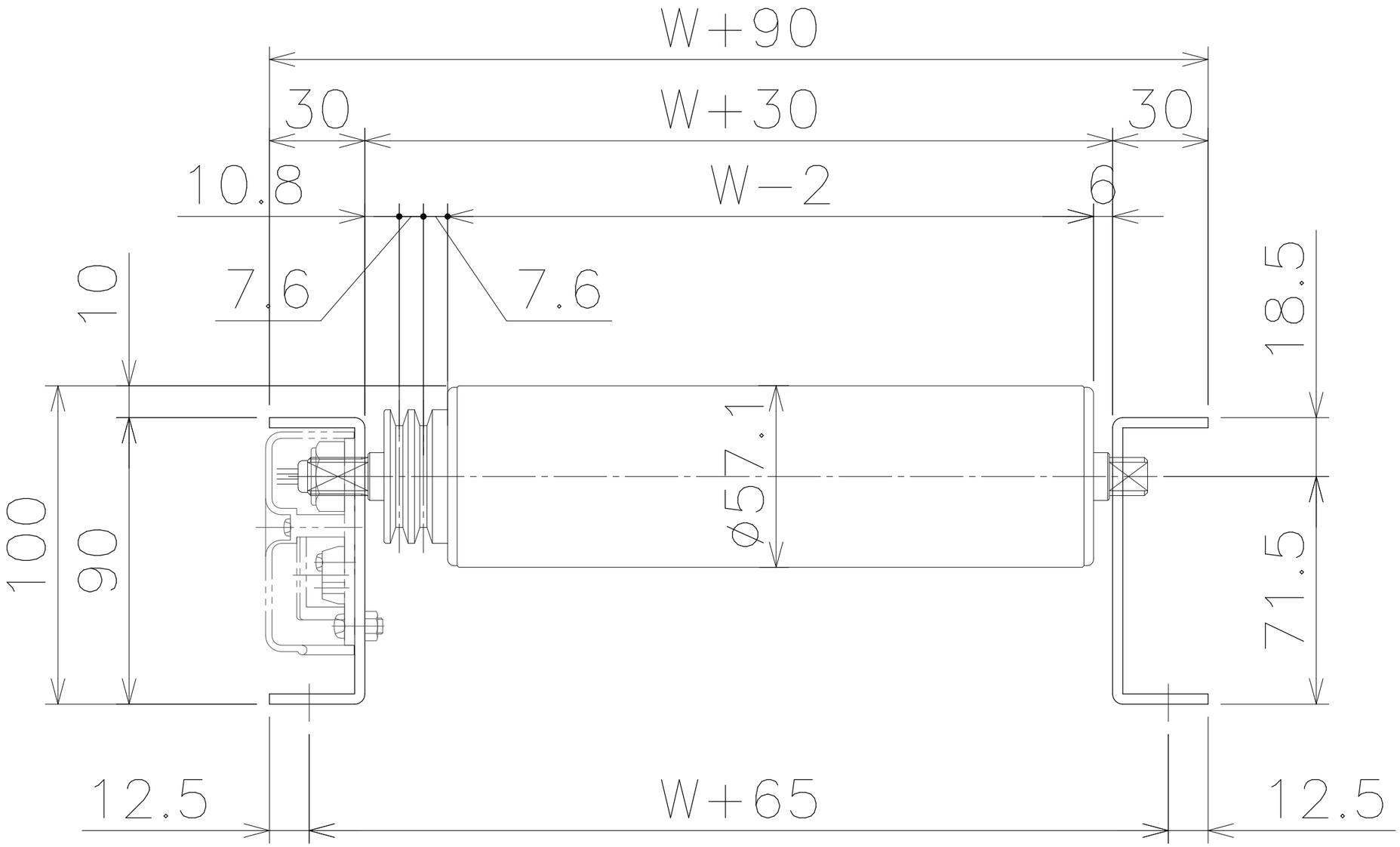
W+90
30
W+30
30
10.8
W−2
6
10
7.6
7.6
18.5
100
90
ø57.1
71.5
12.5
W+65
12.5